ANS Virtual Annual Meeting
EMBEDDED TOPICAL

NPIC HMIT 2021

POTENTIAL USE OF THINKLOGICAL'S KVM TECHNOLOGY IN SAFETY APPLICATIONS

Rick Turk

thinklogical
A BELDEN BRAND

Objectives

- Technology Resources and MPR are working with Thinklogical, a leading KVM system designer to implement (design and qualify) the greater visual display functionality for MCR Modernizations envisioned by the DKT Architecture of LWRS SR I&C Pilot Upgrade

- Functionality improvement goals include:
  - Further simplification of Human System Interfaces (HSI) both inside and outside of the control room
  - Expanded information integration
  - Enhanced cyber security
  - Improved reliability
  - Lower cost
  - Extend remote information access

1. Introduction and Background
2. DKT Architecture and Advantages
3. DKT Configuration and Qualification
4. Results and Conclusions

INTRODUCTION AND BACKGROUND

General Trends In Operational Controls and Operation Centers

- Increasing use of Human System Interface (HIS) in the form of screen images from a computer or other electronic device
- Moving away from many functionally-dedicated HSIs to single multifunctional integrated HSI screens and consoles.
- Multifunctional displays used to provide status overview and situational awareness.

Current status

- Other industries, (e.g., defense, oil & gas and T&D) have been successful in implementing these trends through the use of keyboard-video-mouse (KVM) technology to improve control center data visibility for operating staff.
  - Possible for any operator to access and operate multiple digital inputs with only one set of mouse, keyboard and displays.
  - Operators have the ability for functional selection of displays on multiple screens.
- Non-safety related application of KVM networks are also being used in new nuclear plant such as AP-1000 to provide operators with dynamic control of the information displayed on the large wall panel screens – but not for safety system

KVM Device Basic Function

- Present visual and media information from multiple computer inputs on single or multiple screens using a single keyboard and mouse
- Provides for centralized integrated control consoles instead of discrete control panels
- Simplifies Operator physical movement in task analysis
- Provides integrated information visualization

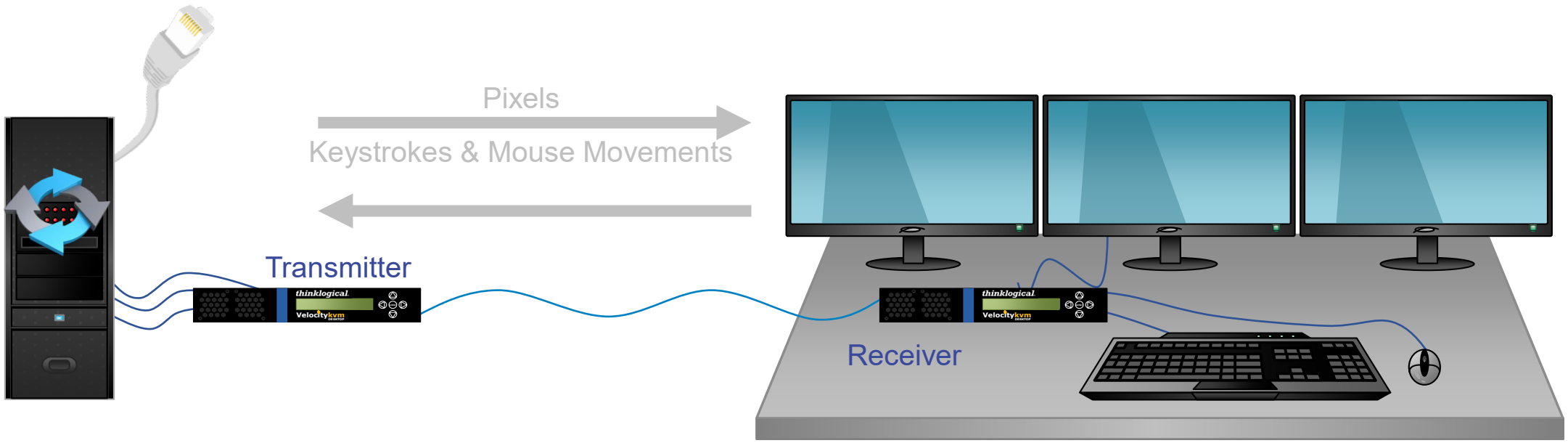

thinklogical
A BELDEN BRAND

ANS

Key Features of advanced KVM

Advantages currently being realized at installations like military command and control centers, electric grid transmission control centers and oil and gas drilling real time operations centers include:

- Control Station layout optimization
- No interference with other equipment
- Less heat & noise
- Fiber optic isolation
- No electrical emanations
- Secure, no eavesdropping
- Safer– no sparks
- Lightweight
- Non conductive
- Solid state drives for storage
- FPGA architecture

thinklogical
A BELDEN BRAND

ANS

DKT ARCHITECTURE AND ADVANTAGE

LWRS Program

- The shared, safety-related HSI architecture identified by LWRS provides a flexible HSI solution for the MCR that:
  - supports both the interim states and the envisioned hybrid end-state for the MCR.
  - Has minimal number of manual switches for the PPS remain in the CR. The remaining manual hardwired PPS switches are retained as diverse backups
  - All other operator interactions use soft controls on the video displays, using A Display Keypad Trackball (DKT) architecture.

Large MCR Modernization Constraints

- Accommodation of interim “states” as changes progress over multiple outages
- Limited space in the control room to add:
  - one or two new dedicated HSI displays, keyboards, and pointing devices for each non-safety related system
  - two new dedicated HSIs for each division of safety systems,
- Location of the existing analog interface elements may not be appropriate for a digital HSI, based on performing a new human factors evaluation.
- Modern design must still comply with regulatory requirements, including the single failure criterion and concerns for software common cause failure (SCCF).

LWRS Operating Nuclear Plants MCR Modernization Goals

- Simplification of the control room layout,
- Improved, Flexible the Human System Interface (HSI),
  - Support the interim states during phased implementation and
  - Supports the envisioned analog-digital hybrid end-state for the MCR
- Cost reduction from fewer displays,
- Consolidation of operator functions.
- Use of a safety qualified switching architecture
  - referred to as a Display Keyboard Trackball (DKT) Architecture

Proposed DKT Architecture

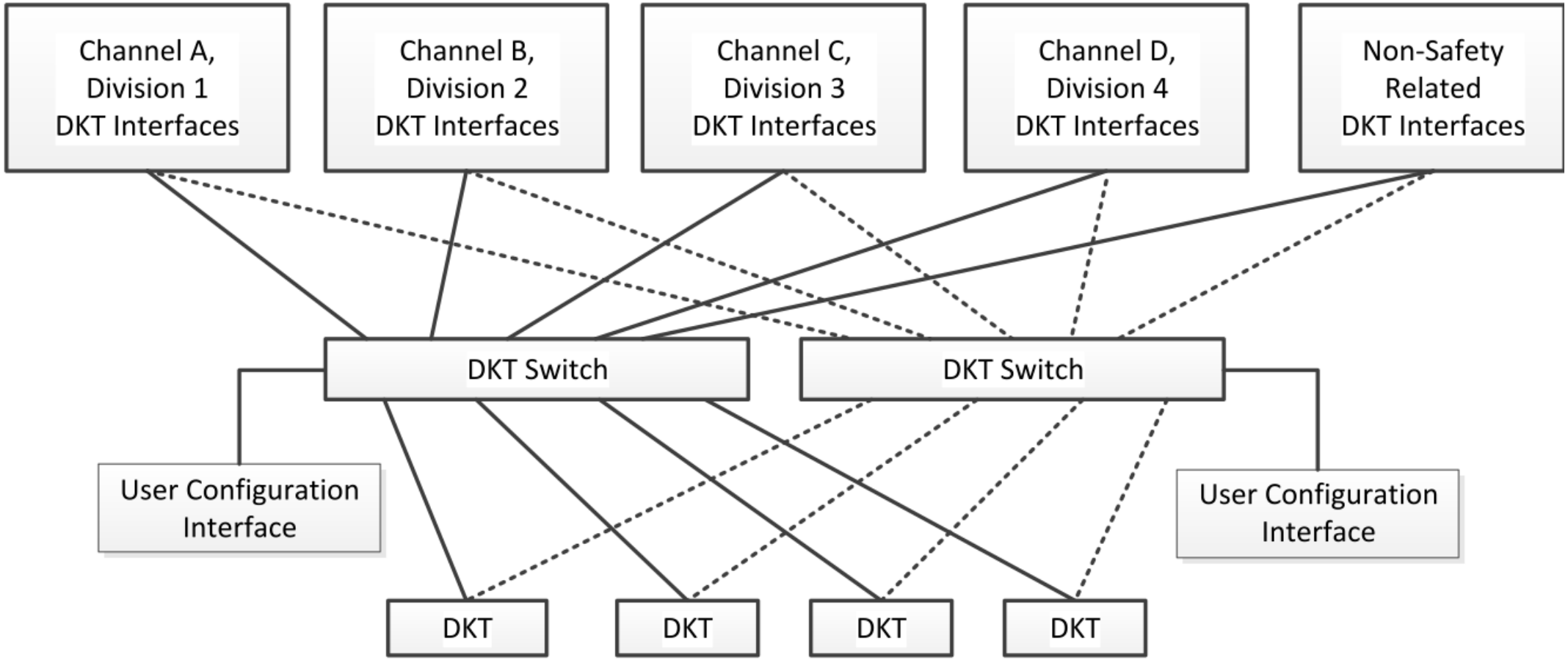

Figure 6. Proposed Display, Keyboard, and Trackball (DKT) Switch Architecture.

DKT Architecture

- Video generators are assigned to a single electrical division to maintain separation within safety systems
- Channel and division data communications to a pair of video generators is structured to be acceptable, by maintaining independence.
- The switching matrix connects only one display, keyboard, and pointing device to one video generator at any time,
- Display, keyboard, and pointing device do not provide a path data or software to be transported between video generators,
- The architecture allows the operator to switch an individual display between all, or a selected set, of video generators

DKT CONFIGURATION& QUALIFICATION

DKT Design

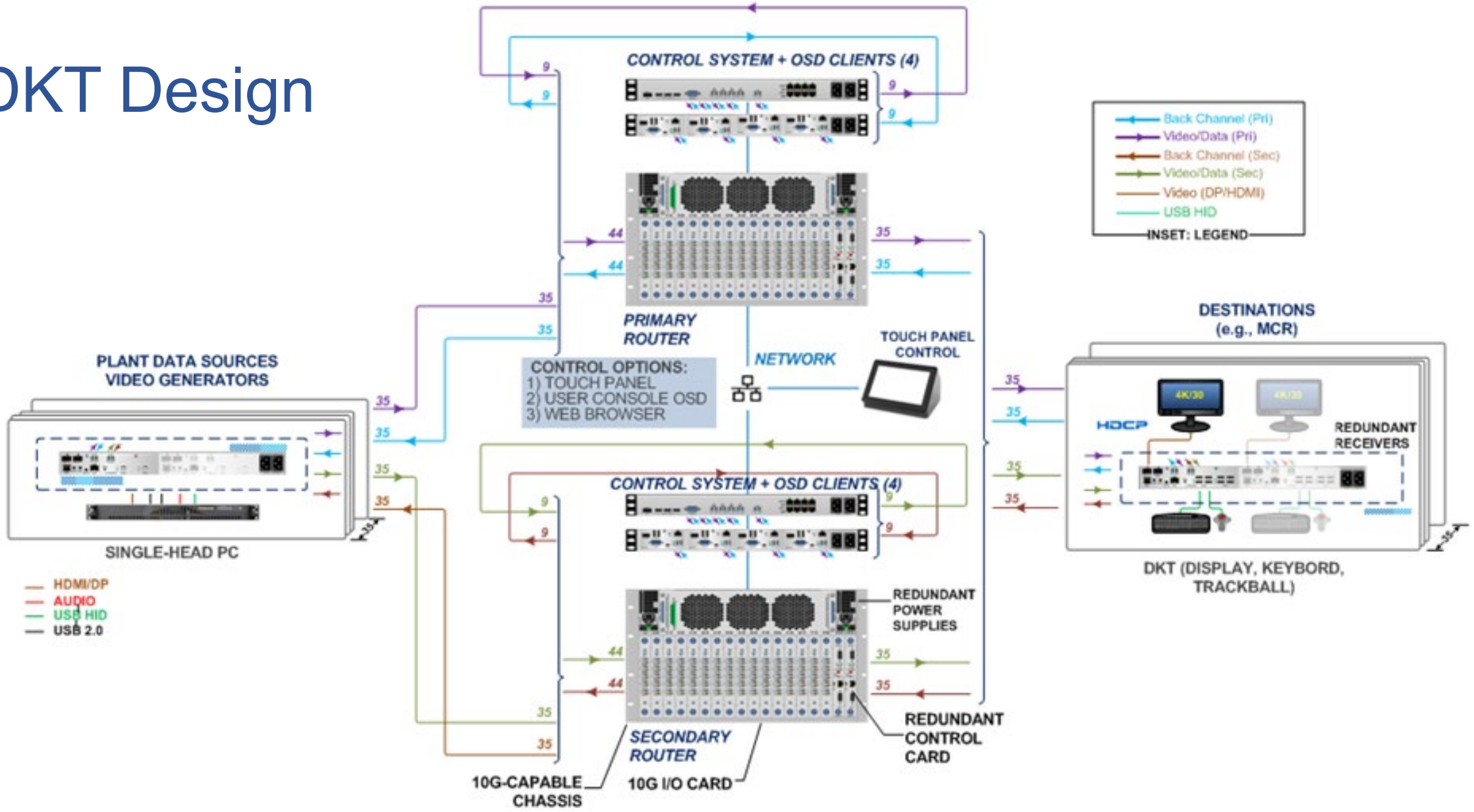

thinklogical
A BELDEN BRAND

ANS

Thinklogical DKT Design

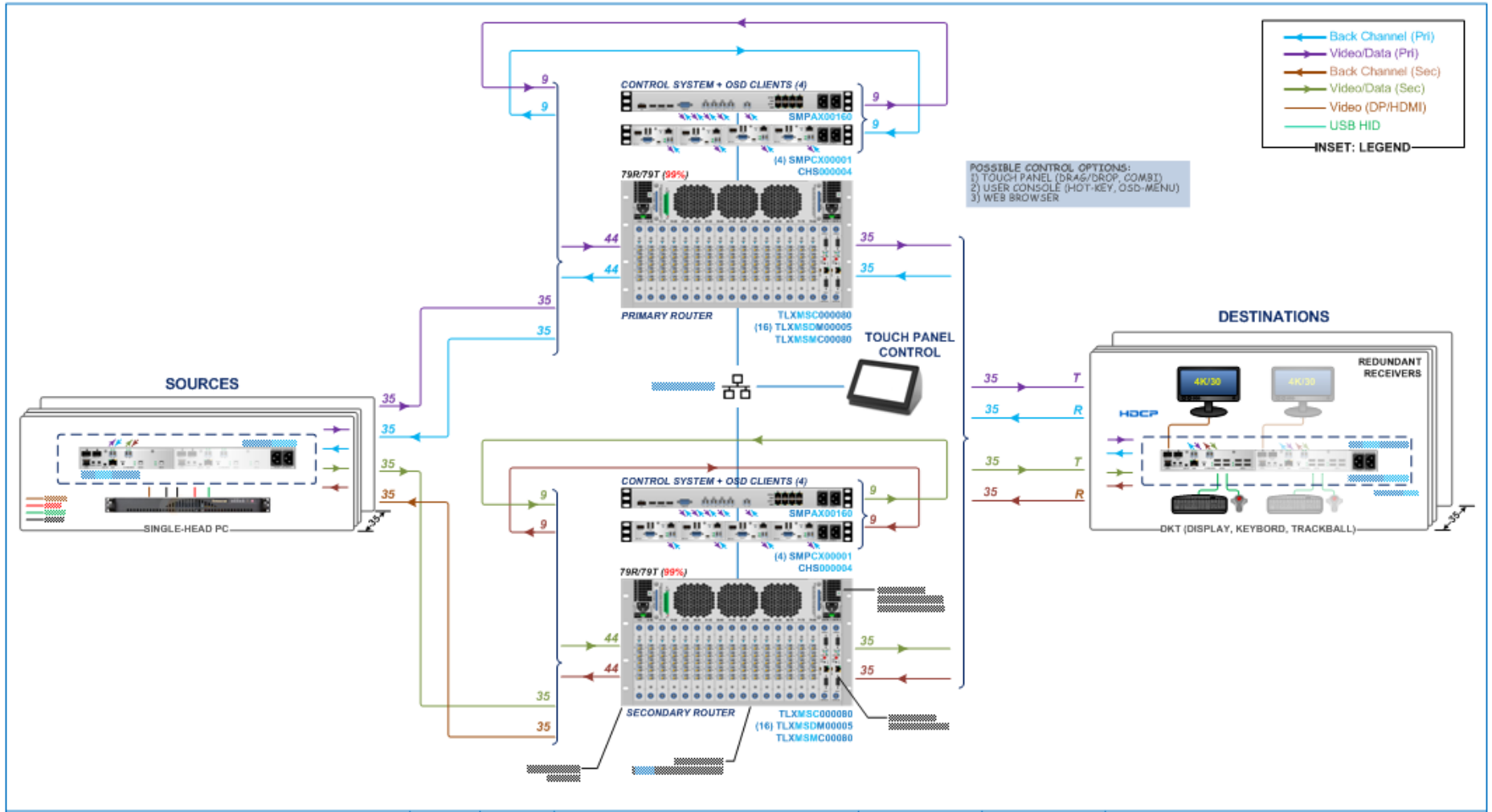

thinklogical®
A BELDEN BRAND

ANS

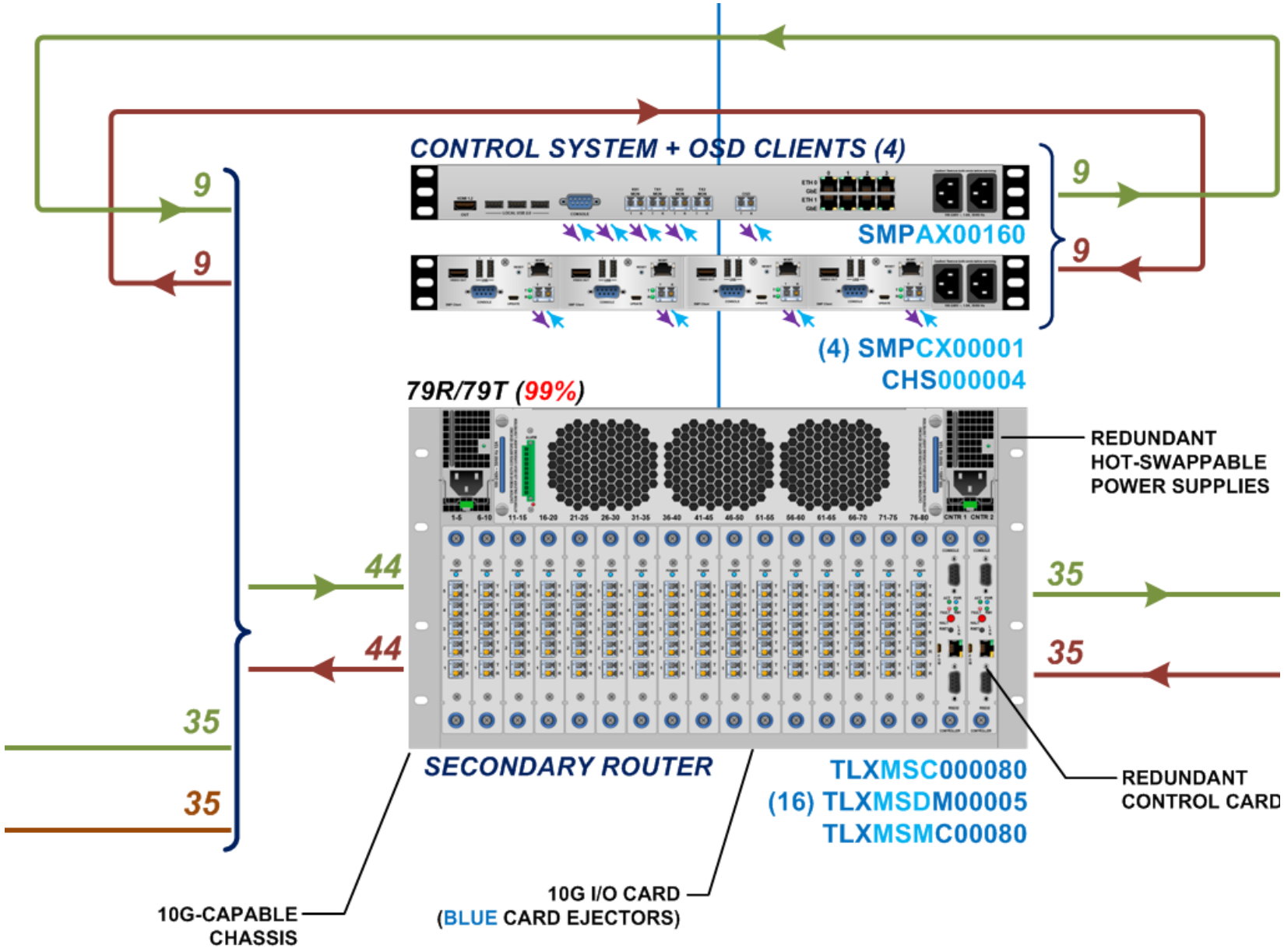

thinklogical
A BELDEN BRAND

ANS

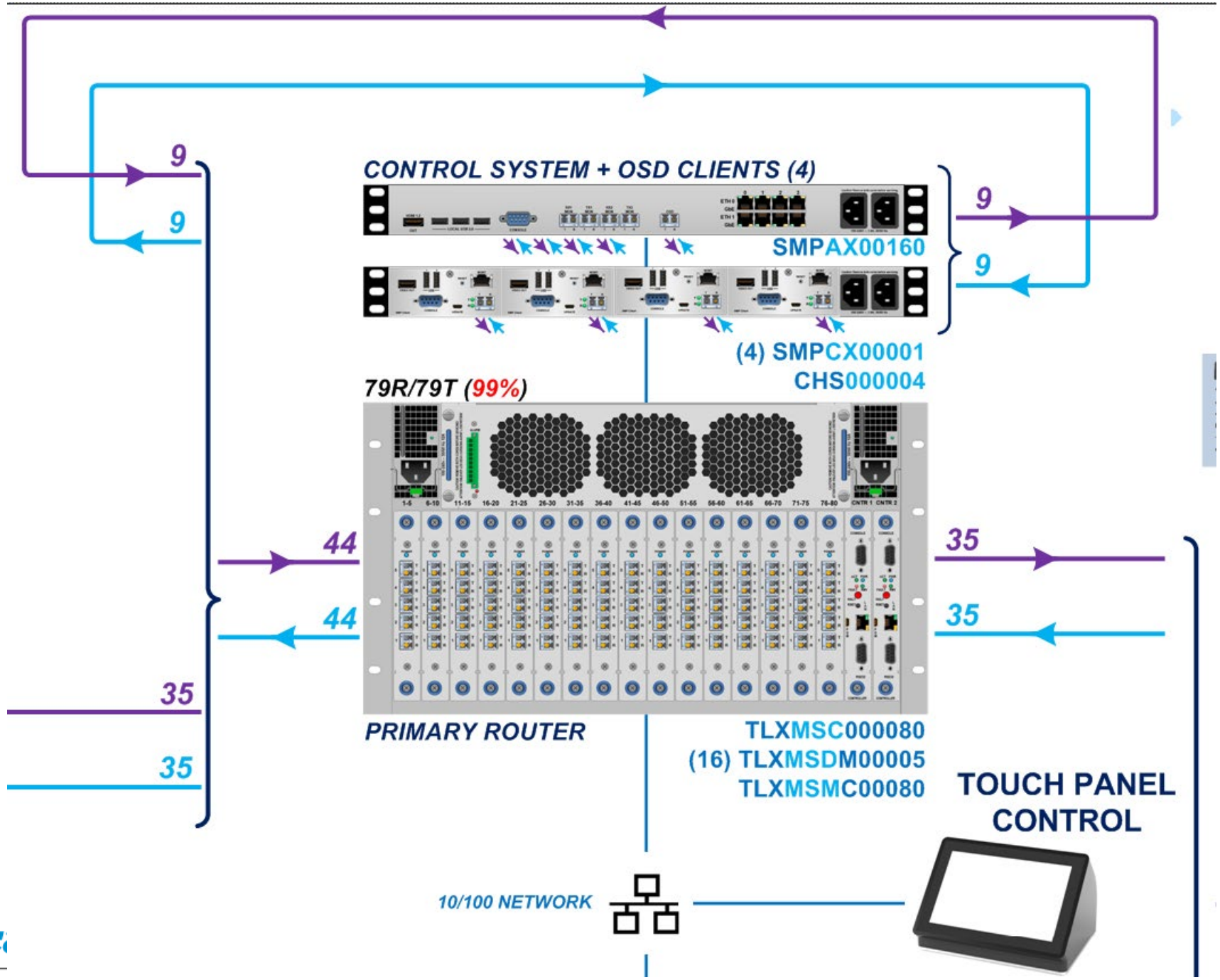

thinklogic
A BELDEN BRAND

ANS

LWRS Program

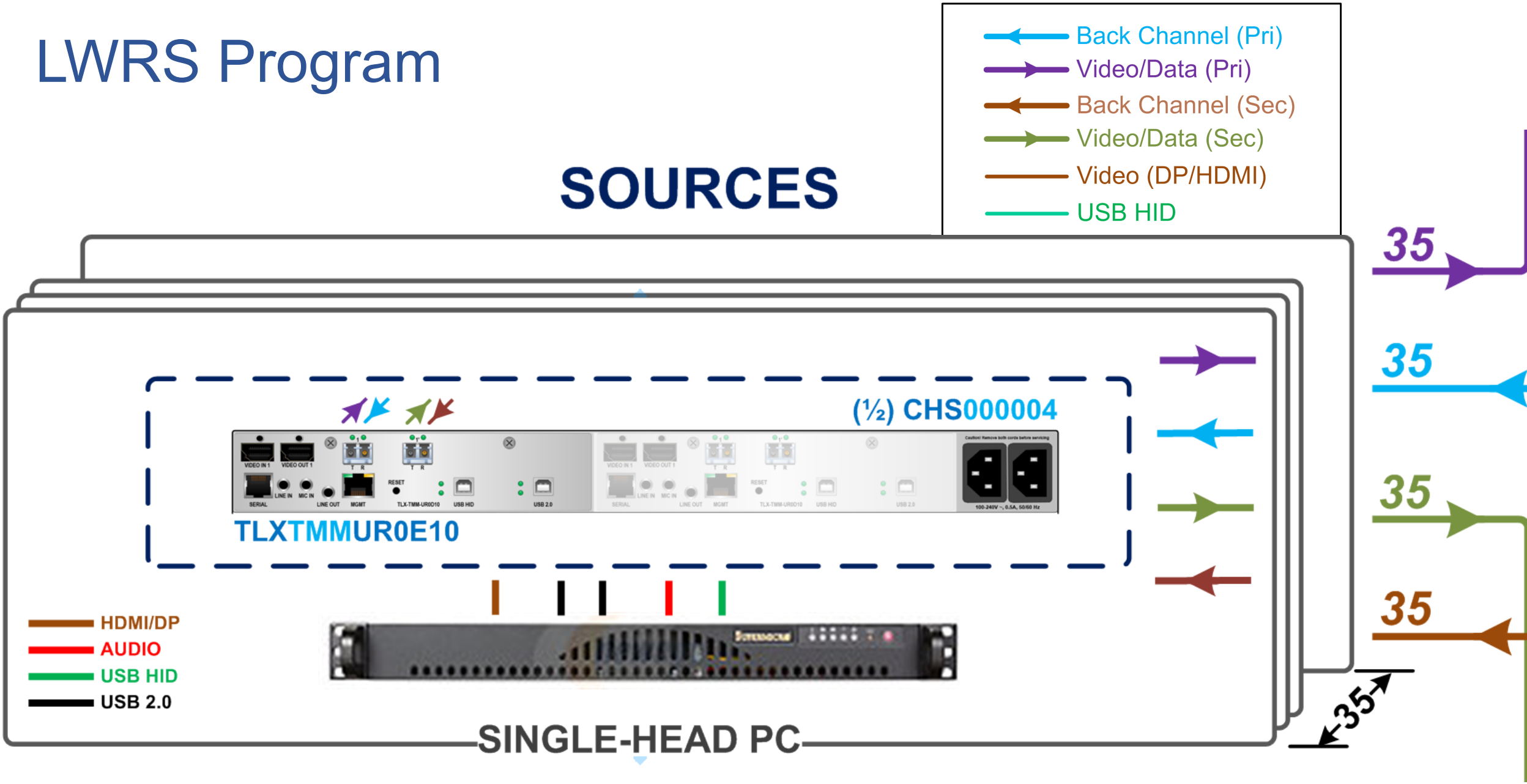

thinklogical
A BELDEN BRAND

ANS

HSI & Human Factors Benefits of KVM

- Smooth keyboard and mouse performance for accurate human/system interactions with reduced frustration
- High resolution, low-latency video distribution for increased visibility and clarity, reduced eye strain
- Allows for display sharing for supervisory oversight, peer review or verification and Human Performance (HuP) monitoring.

HSI & Human Factors Benefits of KVM

- Access and operate more than one computer with only one set of mouse, keyboard and video for less task complexity and increased productivity
- Functional selection of displays enables simpler and faster task execution, reducing operator burden.
- Increased cyber security: Fiber optic isolation, no USB data ports, hard drives or network cables accessible at operator station (insider threat)
- Move computers from operator station to secure IT machine room to reduce heat, noise, and clutter for improved work environment

HSI & Human Factors Benefits of KVM

- Access and operate more than one computer with only one set of mouse, keyboard and video for less task complexity and increased productivity
- Functional selection of displays enables simpler and faster task execution, reducing operator burden.
- Increased cyber security: Fiber optic isolation, no USB data ports, hard drives or network cables accessible at operator station (insider threat)
- Move computers from operator station to secure IT machine room to reduce heat, noise, and clutter for improved work environment

Qualification

- A review has concluded that NQA 1 Qualification of the DKT Design is practical without excessive cost
  - Previous high reliable application (naval warships)
  - Thinklogical offers the only fiber KVM switches certified for multiple security classification environments.
  - TL has NATO Certification for TEMPEST SDIP-27 Level B attack prevention
  - Thinklogical routers have tested and approved for various DOD Environmental standards

Conclusion

- Thinklogical can produce a qualified switching network that that implements the DKT architecture